16-Bit LED Nixie tube Driver and Keyboard Control Chip CH453

Datasheet
Version: 2A
http://wch.cn

1. Overview

CH453 is a 16-bit LED Nixie tube display driver and keyboard scan control chip. CH453 has a built-in clock oscillation circuit, which can dynamically drive 16-bit LED Nixie tubes or 128 LEDs and can also scan the keyboard with 64 keys. CH453 exchanges data with a MCU through a 2-wire serial interface.

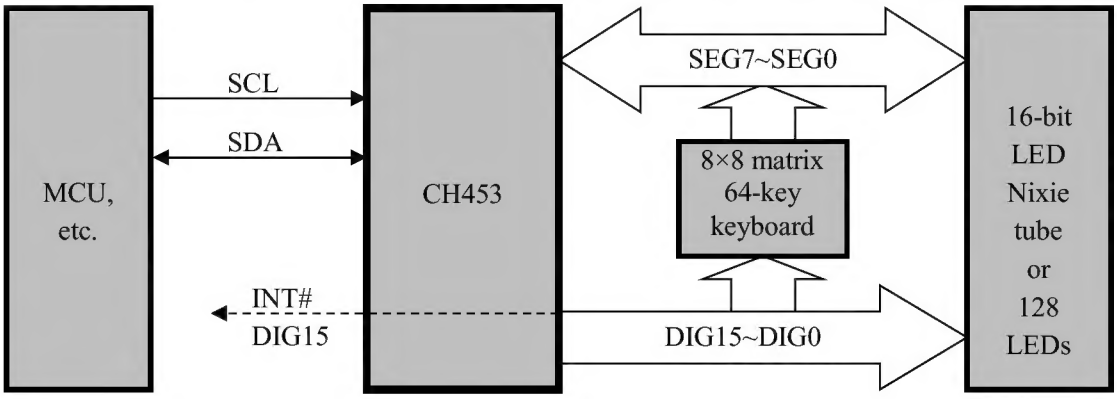

2. Features

- Built-in display current driving stage, segment current not less than 15mA, word current not less than 100mA.
- Dynamic display scanning control, direct drive of 16-bit LED Nixie tubes or 128 LEDs.
- Internal current limiting, provide 3-level brightness control through duty ratio setting.
- Built-in 64-key keyboard controller, based on 8×8 matrix keyboard scan.
- Provide active low keyboard interrupt, key release flag bit for query key to be pressed down and released.
- High speed two-wire serial interface, clock speed from 0 to 2MHz, compatible with 2-line I^2C bus, saving pins.
- Built-in clock oscillator circuit, no need to provide external clock or external oscillator components, more anti-interference.
- Support low-power sleep, save power, can be waked up by key or command operation.
- Package: DIP28S and SOP28, lead-free package, and compatible with RoHS.

3. Package

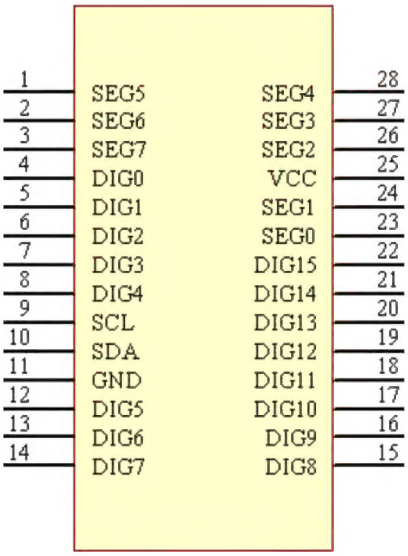

Package	Width		Pitch of Pin		Instruction of Package	Ordering information
DIP28S SK-DIP28	7.62mm	300mil	2.54mm	100mil	Narrow 28-pin dual in-line package	CH453A
SOP28	7.62mm	300mil	1.27mm	50mil	Standard 28-pin pin patch	CH453S

Note: CH453D with SDIP28 package (with pin spacing of 1.78mm) has been discontinued. Use the chip with patch package first.

4. Pins

Pin No.	Pin Name	Type	Description
25	VCC	Power	Positive power supply, continuous current not less than 120mA
11	GND	Power	Common ground, continuous current not less than 120mA
23~24, 26~28, 1~3	SEG0 ~SEG7	Three-status output and input	Segment drive of LED Nixie tube, active at high level Keyboard scan input, active at high level, built-in pull-down resistor
4~8, 12~14	DIG0 ~DIG7	Output	Word drive of LED Nixie tube, active at low level Keyboard scan input, active at high level
15~21	DIG8 ~DIG14	Output	Word drive of LED Nixie tube, active at low level
22	DIG15	Output	Word drive of LED Nixie tube, active at low level It can be set as keyboard interrupt output, the same as INT#
10	SDA	Built-in pull-up Open-drain output and input	two-wire serial interface data input and output
9	SCL	Input	Clock input of 2-wire serial interface, built-in pull-up resistor

Internal pin Has not been led out yet	INT#	Built-in pull-up Open-drain output	Keyboard interrupt output, active at low level

5. Functional Specification

5.1. General Specification

For data in this manual, those ending with B are binary numbers and those ending with H are hexadecimal numbers. Otherwise, they are decimal numbers. The bit marked as x indicates that the bit can be any value.

5.2. Display Driver

CH453 uses dynamic scanning driver for the LED Nixie tube and LED. The order is from DIG0 to DIG15. When one pin sinks the current, the other pins do not sink the current. CH453 has internal current driving stage, which can directly drive 0.5-inch to 1-inch common cathode LED Nixie tube. The segment drive pins SEG6-SEG0 correspond to the segments G-A, the segment drive pin SEG7 corresponds to the decimal point of the LED Nixie tube, and the word drive pins DIG15~DIG0 are respectively connected to the cathodes of 16 LED Nixie tubes. CH453 can also be connected to an 8×16 matrix LED array or 128 independent LEDs, or connected to an external inverse phase driver to support a common anode LED Nixie tube, or connected to a high-power tube to support a large-size LED Nixie tube.

CH453 has 16 8-bit data registers, which are used to store 16-word data, corresponding to 16 LED Nixie tubes or 16 groups of LEDs driven by CH453, 8 LEDs in each group. The bits 7-0 of the word data in the data register correspond to the decimal points and segments G-A of 8 LED Nixie tubes respectively. For LED array, the data bit of each word data uniquely correspond to an LED. When the data bit is 1, the segment of the corresponding LED Nixie tube or LED will be on. When the data bit is 0, the segment of the corresponding LED Nixie tube or LED will be off. For example, the bit 0 of the third data register is 1, so the segment A of the corresponding third LED Nixie tube is on.

The following diagram shows the segment name of the LED Nixie tube.

5.3. Keyboard Scan

CH453 keyboard scan feature supports an 8×8 matrix 64-key keyboard. During keyboard scan, pins DIG7~DIG0 are used for the column scan output, and SEG7~SEG0 pins have internal pull-down resistors for the line scan input.

CH453 periodically inserts keyboard scan during the display driver scan. During keyboard scan, the pins DIG7~DIG0 output high level in sequence from DIG0 to DIG7, and the remaining pins output low level. The outputs of the pins SEG7-SEG0 are disabled. When no key is pressed, SEG7-SEG0 are pulled down to low level. When a key is pressed, for example, the key connecting DIG3 and SEG4 is pressed, SEG4 detects high level when DIG3 outputs high level. In order to avoid error code caused by key jitter or external interference, CH453 performs two scans. Only when the results of two keyboard scans are the same, the key will be confirmed to be valid. If CH453 detects a valid key, the key code will be recorded, and active low keyboard interrupt will be generated through INT# pin. At this time, the MCU can read the key code through the serial interface. CH453 does not generate any keyboard interrupt until a new valid key is detected.

CH453 does not support combination key, that is, two or more keys cannot be pressed at the same time. If multiple keys are pressed at the same time, the key with the smaller key code will take precedence.

The key code provided by CH453 is 7-bit, bits 2-0 are column scan codes, bits 5-3 are line scan codes, and bit 6 is status code (1 when the key is pressed, 0 when the key is released). For example, when the key connecting DIG3 and SEG4 is pressed, the key code is 1100011B or 63H. After the key is released, the key code is usually 0100011B or 23H (or other values, but certainly less than 40H), where the column scan code corresponding to DIG3 is 011B, and the line scan code corresponding to SEG4 is 100B. The MCU can read the key code at any time, but it generally reads the key code when CH453 detects a valid key and produces keyboard interrupt. At this time, the bit 6 of the key code is always 1. In addition, if you need to know when the key is released, the MCU can read the key code regularly by inquiry until the bit 6 of the key code is 0.

The following table shows 8×8 matrix key addresses between DIG7-DIG0 and SEG7-SEG0, which are also the sequence addresses of the segments for the LED Nixie tube and LED arrays. As the key code is 7-bit, the bit 6 is always 1 when the key is pressed. When the key is pressed, the actual key code provided by CH453 is the key address in the table plus 40H, that is, the key code should be 40H-7FH.

Addressing	DIG7	DIG6	DIG5	DIG4	DIG3	DIG2	DIG1	DIG0
SEG0	07H	06H	05H	04H	03H	02H	01H	00H
SEG1	0FH	0EH	0DH	0CH	0BH	0AH	09H	08H
SEG2	17H	16H	15H	14H	13H	12H	11H	10H
SEG3	1FH	1EH	1DH	1CH	1BH	1AH	19H	18H
SEG4	27H	26H	25H	24H	23H	22H	21H	20H
SEG5	2FH	2EH	2DH	2CH	2BH	2AH	29H	28H
SEG6	37H	36H	35H	34H	33H	32H	31H	30H
SEG7	3FH	3EH	3DH	3CH	3BH	3AH	39H	38H

5.4. Serial Interface

CH453 has a two-wire serial interface realized by hardware, including two main signal lines: serial data clock input line SCL, serial data input and output line SDA. And an auxiliary signal line: interrupt output line INT#. Wherein, SCL is the input signal line with a pull-up resistor and at high level by default. SDA is a semi-bidirectional signal line with a pull-up resistor and at high level by default. INT# is an open-drain output with a pull-up resistor. When the keyboard scan function is enabled, it acts as a keyboard interrupt output line and at high level by default.

SDA is used for serial data input and output. The high level represents bit data 1, and the low level represents bit data 0. The sequence of serial data input is that the high bit is at the front and the low bit is at the back.

SCL is used to provide a serial clock, CH453 inputs data from SDA on its rising edge and outputs data from SDA on its falling edge.

SDA falling edge occurring during the SCL high level period is defined as the start signal of the serial interface, and SDA rising edge occurring during the SCL high level period is defined as the stop signal of the serial interface. CH453 receives and analyzes the command only after detecting the start signal. Therefore, when I/O pin resources of the MCU are short, SCL pin can be shared with other interface circuits while SDA pin state is unchanged. Both SCL and SDA pins can be shared with other interface circuits if it is possible to ensure that SDA pin changes only when SCL pin is at low level.

INT# is used for keyboard interrupt output and is at high level by default. INT# outputs keyboard interrupt active at low level when CH453 detects a valid key. After the MCU is interrupted, it performs a read operation to CH453, and CH453 recovers the INT# to high level and outputs the key code from SDA. The MCU gets a byte of data from SDA, among which the lower 7 bits are the key code.

The communication process between the MCU and CH453 is always divided into six steps. According to the operation direction of MCU, it is divided into two types: write operation for output data and read operation for input data. For the specific process, please refer to Example Program.

Write operation consists of six steps: output start signal, output byte 1, response 1, output byte 2, response 2 and output stop signal. Among them, the start signal and the stop signal are as mentioned above, response 1 and response 2 are always fixed to 1, output byte 1 and output byte 2 respectively contain 8 data bits, namely, one byte of data.

Read operation consists of six steps: output start signal, output byte 1, response 1, output byte 2, response 2 and output stop signal. Among them, the start signal and the stop signal are as mentioned above, response 1 and response 2 are always fixed to 1, output byte 1 and output byte 2 respectively contain 8 data bits, namely, one byte of data.

The following figure shows an example of write operation. The byte 1 is 01001000B, namely, 48H. The byte 2 is 00000001B, namely, 01H.

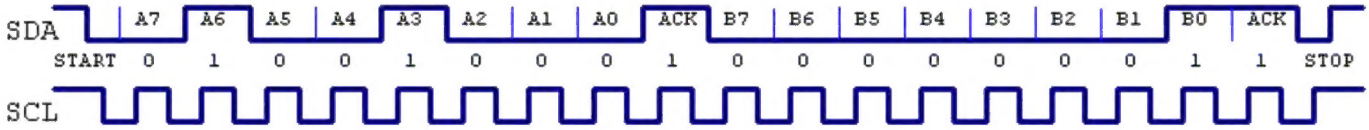

6. Operation Commands

The operation commands of CH453 are divided into 4 groups. Start signal, stop signal, response 1 and response 2 are the same for each command, except that the data of output bytes 1 and byte 2 are different and that byte 2 is transmitted in different direction.

6.1. Setting of System Parameter Commands

The byte 1 of this command is 01001000B, namely 48H. The byte 2 is [SLEEP][INTENS]0[X_INT]0[KEYB][DISP]B.

This command is used to set system-level parameters of CH453: display driver enable DISP, keyboard scanning enable KEYB, DIG15 interrupt output enable X_INT, display driver brightness control INTENS, low-power sleep control SLEEP.

The output is allowed to be displayed when DISP bit is 1, and the display driver is closed when DISP bit is 0.

The keyboard scan is enabled when KEYB bit is 1, and the keyboard scan is closed when KEYB bit is 0.

When the X_INT bit is 1, up to 15-bit LED Nixie tubes are supported. DIG15 pins are used for keyboard interrupt output, whose functions are the same as the INT# pin. When X_INT bit is 0, it supports up to 16-bit LED Nixie tubes. DIG15 are similar to DIG8~DIG14 as word drive.

INTENS is used to control the brightness of the display driver, which contains two-bit data and has 4 combinations: data 00B, 01B and 10B respectively set the duty cycle of the display driver to 4/4, 1/4 and 2/4, and enable the internal segment drive current limiter. Data 11B sets the display drive duty cycle to 4/4, but the internal segment drive current limiter is disabled, so the external segment pin is required to be connected with the current limit resistor R0 in series.

SLEEP is used to make CH453 into a low-power sleep state, so as to save power. CH453 in low-power sleep state can be waked up by any of the following two events. The first event is the detection of keys on SEG3-SEG0, and the valid key code is from 40H to 5FH. The second event is the reception of next operation command sent by the MCU. When CH453 is waken up, SLEEP bit is automatically cleared to 0. Sleep and Wake Up operations do not affect other working states of CH453. If KEYB bit is 1, key interrupt will occur

after waking up. If KEYB bit is 0, key interrupt will not occur after waking up.

This command does not affect the data in the internal data buffer.

6.2. Word-data loading command

The byte 1 of the command is 011[DIG_ADDR]0B, i.e. 60H, 62H, 64H, 66H, 68H, 6AH, 6CH, 6EH, 70H, 72H, 74H, 76H, 78H, 7AH, 7CH and 7EH. Byte 2 is [DIG_DATA]B, i.e. the value between 00H and 0FFH.

"Word-data loading command" is used to write the word data DIG_DATA to the data register at the specified address DIG_ADDR. DIG_ADDR specifies the address of the data register through 4-bit data. Data 0000B-1111B specify the addresses 0-15 respectively, corresponding to 16 LED Nixie tubes driven by the pins DIG0~DIG15. DIG_DATA is 8-bit word data. For example, command data 01100000B and 01111001B means that word data 79H is written into the first data register so that the LED Nixie tube driven by the pin DIG0 will display E.

The data in CH453 internal data register is uncertain after power on reset, so the data in the data register should be cleared or the data to be displayed should be directly loaded before the display is started. The reset process does not affect the data in the data register.

6.3. Read Key Code Commands

The output byte 1 of this command is 01001111B, namely, 4FH. The lower 7 bits of the input byte 2 are the key code.

"Read Key Code Commands" is used to get the code for the valid key that CH453 recently detects. The command is read operation, a command with data return. The MCU must first release SDA pin (three-state output is disabled or pulled up to the high level), and then CH453 outputs the key code from SDA pin, the valid data of the key code is bit 6-0 data, the bit 6 is a status code, the bits 5-0 are scan codes and key addresses.

6.4. Read Segment Pin State Command

The output byte 1 of this command is 01001101B, namely, 4DH. The input byte 2 is the current state of the segment pins SEG7~SEG0.

"Read Segment Pin State Command" is used to obtain the current state of SEG7 ~ SEG0 pins. The command is a read operation, it is a command with data return. The MCU must first release SDA pin (three-state output is disabled or pulled up to the high level), and then CH453 outputs the current pin state from SDA pin.

7. Parameters

7.1. Absolute Maximum Value

Critical value or exceeding the absolute maximum value may cause the chip to work abnormally or even be damaged.

Name	Parameter description	Min.	Max.	Unit
TA	Ambient temperature during operation	-40	85	℃
TS	Ambient temperature during storage	-55	125	℃
VCC	Supply voltage (VCC is connected to the power supply, GND is grounded)	-0.5	6.0	V
VIO	Voltage on the input or output pins	-0.5	VCC+0.5	V
IMdig	Continuous drive current of single DIG pin	0	120	mA
IMseg	Continuous drive current of single SEG pin	0	25	mA

IMall	Total continuous drive current of all SEG pins	0	130	mA

7.2. Electrical Parameters

Test Conditions: TA=25℃, VCC=5V

Name	Parameter description	Min.	Typ.	Max.	Unit
VCC	Power supply voltage	3.0	5	5.3	V
ICC	Current of power supply		80	120	mA
ICCs	Static current (SCL and SDA are at high level)		0.5	1	mA
VIL	Low level input voltage of SCL and SDA pins	-0.5		0.8	V
VIH	High level input voltage of SCL and SDA pins	2.0		VCC+0.5	V
VOLdig	Low level output voltage of DIG pin (-80mA)			0.8	V
VOHdig	High level output voltage of DIG pin (8mA)	4.5			V
VOLseg	Low level output voltage of SEG pins (-15mA)			0.5	V
VOHseg	High level output voltage of SEG pin (15mA)	4.5			V
IUP1	Input pull-up current of SCL pin		100	300	uA
IUP2	Input pull-up current of SDA pin		250	400	uA
IUP3	Output pull-up current of INT# pin		500	5000	uA
VR	Default voltage threshold of power on reset	2.3	2.6	2.9	V

7.3. Internal Timing Parameters

Test Conditions: TA=25℃, VCC=5V

(Note: The timing parameters in this table are multiples of the built-in clock periods, and the frequency of the built-in clock decreases with the decrease of the supply voltage)

Name	Parameter description	Min.	Typ.	Max.	Unit
TPR	Reset time generated during power on detection	8	20	60	mS
TDP	Display scan period		8		mS
TKS	Key response time (two keyboard scans)	20	50		mS

7.4. Interface Timing Parameters

Test Conditions: TA=25℃, VCC=5V, refer to the attached figure

(Note: The unit of measurement in this table is nanosecond, namely, 10^{-9} seconds. If the maximum value is not indicated, the theoretical value can be infinite.)

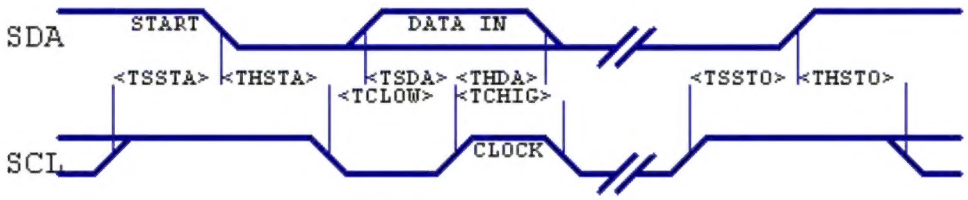

Name	Parameter description	Min.	Typ.	Max.	Unit
TSSTA	Setup time of SDA falling edge start signal	100			nS
THSTA	Hold time of SDA falling edge start signal	100			nS
TSSTO	Setup time of SDA rising edge stop signal	100			nS
THSTO	Hold time of SDA rising edge stop signal	100			nS
TCLOW	Low level width of SCL clock signal	100			nS
TCHIG	High level width of SCL clock signal	100			nS
TSDA	Setup time of SDA input data to SCL rising edge	30			nS
THDA	Hold time of SDA input data to SCL rising edge	10			nS
Rate	Average data transmission rate	0		2M	bps

8. Application

8.1. Application Circuit

CH453 is connected to the external MCU through two-wire serial interfaces SCL and SDA. Capacitors C1 and C2 are arranged near the power pins of CH453 to decouple the power supply and reduce the interference caused by driving high current.

CH453 can drive 16 common cathode LED Nixie tubes dynamically. After the pins on the same segments of all LED Nixie tubes are connected in parallel (segments A-G and decimal point), they are connected with the segment drive pins SEG0-SEG7 of CH453 through a series current limiting resistors R1~R8. The common cathodes of the LED Nixie tubes are driven by the pins DIG0~DIG15 of CH453 respectively. The resistors R1~R8 connected with the segment pins in series are used to limit and balance the segment drive current. At the supply voltage of 5V, the series resistance 270Ω often corresponds to the segment current 10mA. Since CH453 can internally limit the segment drive current, R1~R8 resistors can be eliminated.

If a common anode LED Nixie tube is required to be driven, refer to the methods in the data manual for CH452 chip.

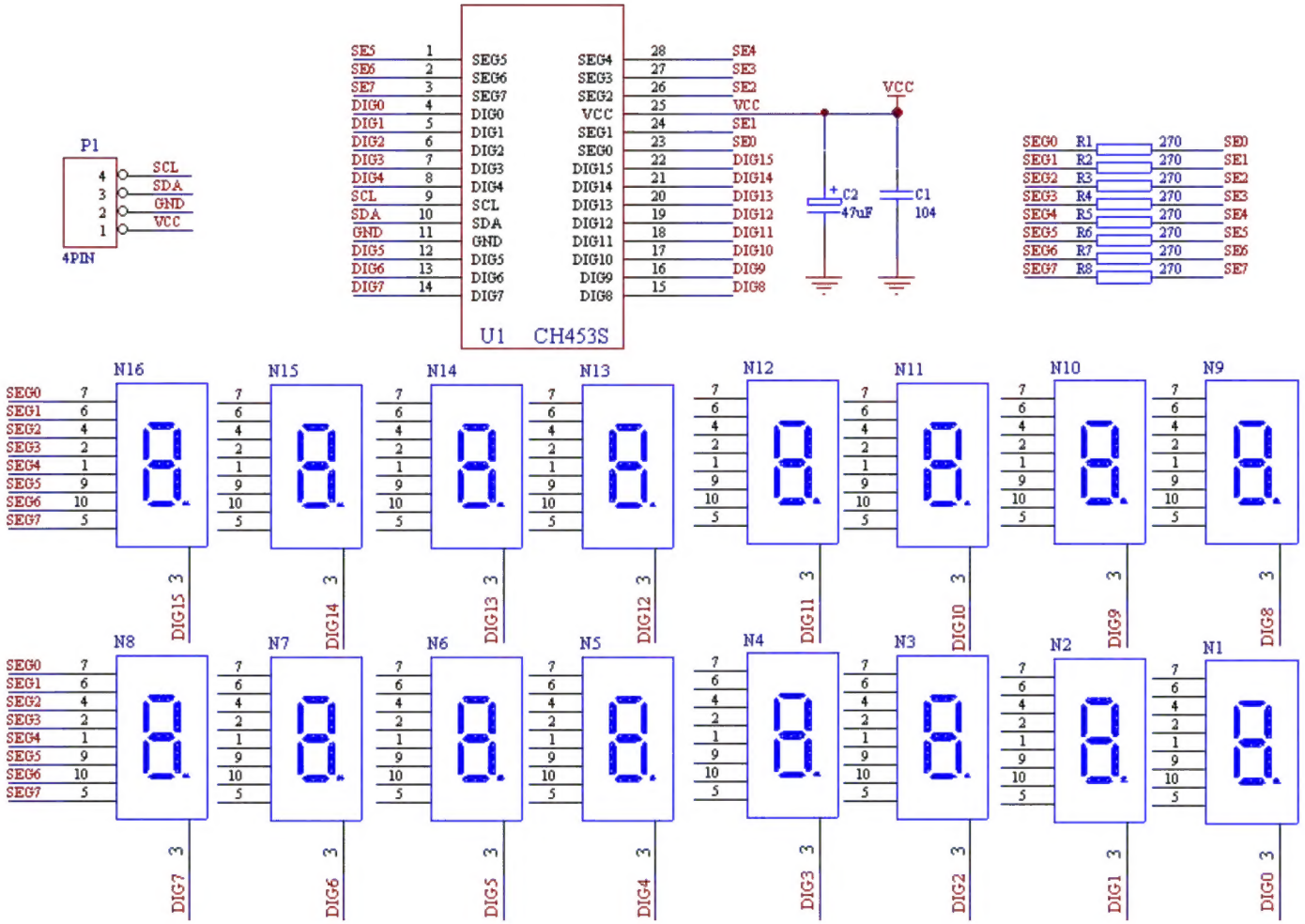

8.2. Anti-interference

As CH453 drives LED Nixie tube or LED has high current, high glitch voltage will be generated on the power supply. Therefore, if the PCB wiring of the power line or ground wire is not reasonable, it may affect the stability of the MCU or CH453. It is recommended to use a thicker power line and ground wire, and connect the power supply decoupling capacitor in parallel between the positive and negative power supplies close to CH453.

For the application environment with strong interference, the MCU can refresh CH453 every a few seconds, including reloading the data register of each LED Nixie tube and restarting the display.

In addition, if CH453 is driven remotely by the I/O pin of the standard MCS-51 MCU, the pull-up capacity of the I/O pin for MCS-51 MCU should be strengthened, so as to maintain a good digital signal waveform during remote transmission. The resistance of the pull-up resistor can be 1KΩ to 10KΩ, and no pull-up resistor is required at short range.

8.3. MCU Interface Program

The website provides part of C program language and ASM assembly interface program for the MCU.